Installation Instructions
Model 114 Mechanical Joint Bell/Split Repair Sleeve

Failure to follow installation instructions will result in voided product warranty.

Read instructions before starting installation*
Review of Drawings on the reverse before starting will assist with installation.
For purposes other than water, contact JCM Industries for application and product assistance.

1. Clean and scrape pipe. Remove any scale, pipe wrap, debris or dirt that may interfere with the complete sealing of the gasket. Inspect pipe for integrity, size, outside diameter and surface irregularities. Confirm the proper size and range of repair sleeve. Inspect fitting to ensure all parts are included. **For fittings furnished with stainless steel hardware, see reverse for fastener management. Lubricate the pipe and the fitting gasket with soapy water. Do not use oil base pipe lubricant.**

2. Check to be sure that the square side gaskets are properly seated in side bar grooves. Side gaskets will protrude from side bar ends about 1 inch (1”). **Do not cut the gaskets at this point.**

3. **(Drawing - A)** See reverse side for drawings. Install sleeve in proper position on pipe and match color marks on body. Install longest “corner” bolts loosely to align sleeve halves. Install side bar bolts. For sleeve sizes provided with two bolt lengths, longer bolts are to be installed on the MJ ends. For underwater applications be familiar with and rehearse proper procedures.

4. Tighten side bar bolts first, starting in the center and working toward the ends. Next, tighten the corner bolts so that the sleeve halves are butted together evenly and squarely. **Note: The square side gaskets should protrude into the area where the end gasket will seat. Cut the gasket such that it protrudes 1/8” to 3/16” into the area where the end gasket will seat, as show in Detail Drawing D. Do NOT pull on the gasket when cutting, simply hold the gasket without tension. If the gasket is pulled/stressed when cut, it will contract back (like a rubber band) into the groove cavity - and be too short to make contact with the end gasket.**

All bolts should be @ 80 Ft/Lbs. torque minimum

(Stainless Steel hardware may require molybdenum-base antiseize lubricant.)

5. **Block under sleeve to center it on pipe.** See **(Drawing - B)** Install end gaskets, placing lap 45° (1/8 turn) from side bars. Side bar gaskets will protrude approximately 1/8” to 3/16” length from the side bar joint.

NOTE 1: Sleeves are furnished with long end gaskets. To cut them to length, place the gaskets around the pipe and cut one end on the bias so that the gasket fits snugly around the pipe and the bias cut ends match. **(Drawing B).**

NOTE 2: If necessary, lubricate end gaskets for easier installation. Apply a standard gasket soap lubricant as used in rubber joint pipe installations or soapy water. **Do not use oil base lubricant.** Do use water soluble lubricant.

NOTE 3: JCM provides the gasket thickness calculated for the fitting/application. JCM can provide different thicknesses of MJ end gaskets should the gaskets provided not complete the water tight installation. For gasket information, contact JCM Technical Sales.

NOTE 4: If two sets of MJ end gasket have been included with your fitting, notice they are different thicknesses. During the product ordering process it was determined that unknown pipe irregularities may require a different thickness of gasket to provide the best fit. For gasket information, contact JCM Technical Sales.

6. (**Drawing - C**) Pusher glands have **color match marks indicating the proper end and location of each segment of the pusher gland.** Install glands so that the color match marks are to the outside. On the pusher gland, install the longer lip of the ring towards the MJ gasket. Install pusher gland so that joints are 90° (1/4 turn) from side bars. Install pusher gland so color match marks line up. Tighten bolts evenly to approximately 80 ft. lbs. (more if required). For sleeve sizes 30” and larger, pushers are provided in multi segments and include doubler kits, match colored dots accordingly.

NOTE: Pusher glands must be positioned and matched to the markings provided for proper installation. For proper gasket and pusher gland positioning, see drawing on reverse. No “joints” (gasket, body, pusher gland) should be in line with each other.

7. Test sleeve. A test plug is provided on the sleeve for this purpose should testing be required. When assured that all seals are tight and test is completed, re-check bolt torques after 15 minutes.

JCM endorses the ANSI/AWWA C105/A21.5 and ASTM A674 for polyethylene encasement for corrosion protection. For water applications: if applicable, test assembly seals with water (per ANSI/AWWA C223). When testing the assembly against the pipe to pressures greater than the internal pressure of the host pipe, application should be treated with caution to prevent imploding or damaging the pipe wall due to thin wall, flexible or brittle conditions. For inquiries, contact JCM Industries, Inc.

*Ensure fitting is suitable for application (confirm size, materials, pressure ratings, line content, meets local governing & association standards, etc.). Pipeline operation forces, including pressure fluctuations, thermal expansion/contraction, movement/shifting, etc. will influence the success of the application. Proper anchorage, restraint, harnessing, thrust blocks or other devices must be provided to prevent pipe movement (lateral, angular, axial) or pipe pullout from the bolt-on fitting. Inspection of the pipe integrity is the responsibility of the end user. JCM recommends the use of calibrated torque wrench. Failure to follow installation instructions will result in voided product warranty.

Installation Instructions
JCM Model 114 Mechanical Joint Bell/Split Repair Sleeve

Failure to follow installation instructions will result in voided product warranty.

For Fittings Equipped With Stainless Steel Bolts and Nuts

When not properly handled it is the nature of stainless steel fasteners to gall and freeze (seize up). This is due to the inherent properties of the stainless material. Galling and freezing is often triggered by the presence of metal chips, burrs and grains of sand on the threads of the bolts and nuts. Extra care has been taken by JCM prior to assembly and packing of this fitting to assure a trouble-free installation.

1. The nuts and bolts are made from material of different hardness so that they have different strengths.
2. Nuts are coated with a special anti-seize coating. Additional lubricant may be needed. **A Molybdenum-Base lubricant is recommended.**
3. Each nut is assembled by hand to be sure that it went on the bolt freely.
4. The bolts and nuts are handled carefully to avoid damage to the threads.
5. The bolts and nuts are made to exacting specifications to assure that the correct material is used and that the thread form is correct.

Stainless hardware is especially susceptible to galling. JCM supplies specially coated nuts to eliminate the galling caused by over-torquing, but **the bolt threads must be kept clean, free from nicks and not pitched or thrown into the tool bucket during the installation process.** Use of a **Torque Wrench with Deep Socket is highly recommended.** Use of pneumatic wrench for installation could cause hardware to seize and is not recommended.

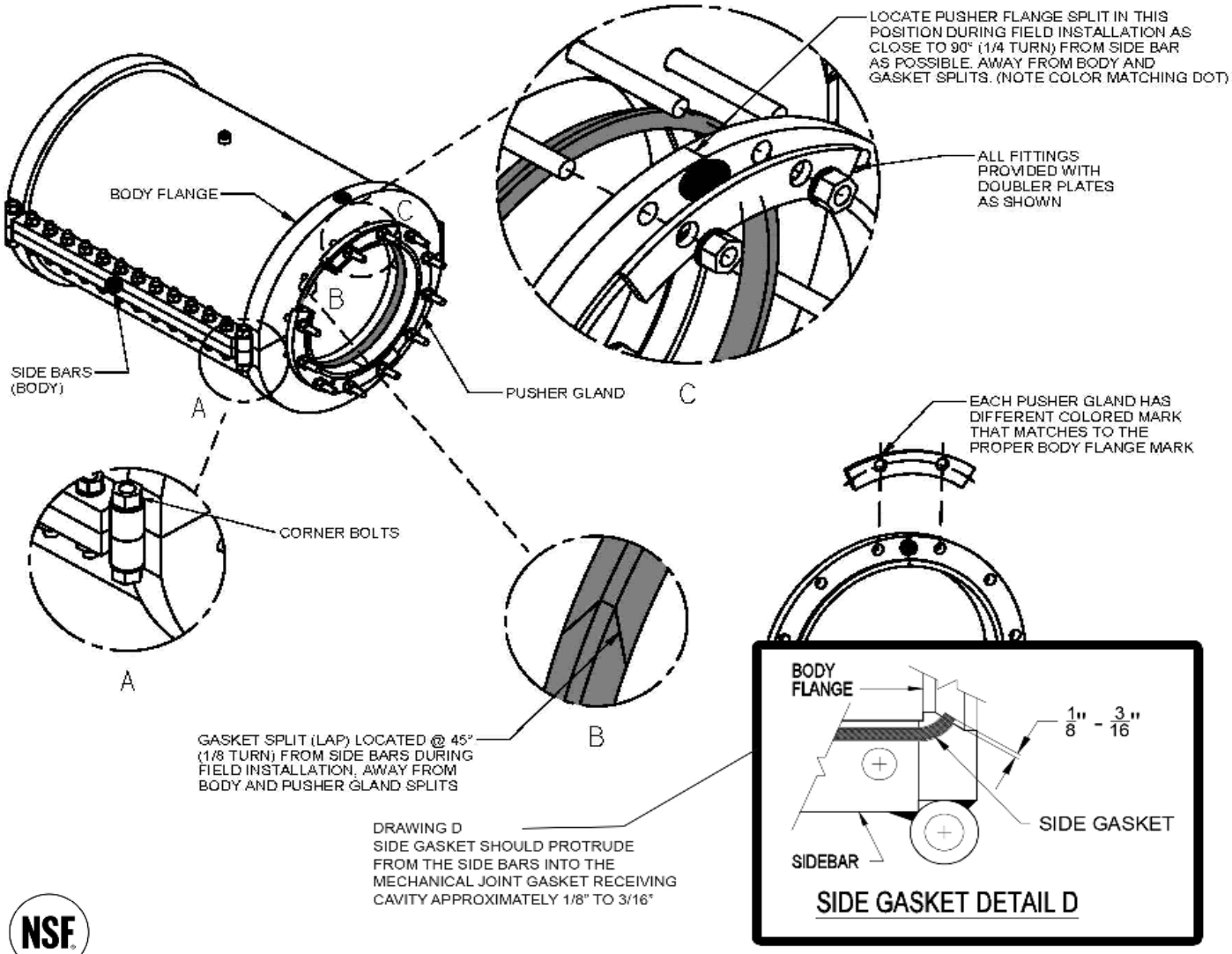

Certified to NSF/ANSI/CAN 61 & NSF/ANSI 372

For application review or questions contact JCM Industries at 1-800-527-8482, 903-832-2581 **INT114-1019**